Email: sales@impulseautomation.co.uk
Website: www.impulseautomation.co.uk

Kuhnke Clamping Cylinder

Double Acting Cylinder Ø 32mm - 63mm (Through Rod)

Technical information

Operating pressure:	0.5-10 bar
Temperature range:	-10˚C...+70˚C
Housing:	Aluminium alloy
Rod/cap:	Steel corrosion resistant/brass
Seals:	Perbunan
Lubricant:	Shell Tellus C10
Operating medium:	5 micron filtered, lubricated or non-lubricated compressed air.

Piston dia. mm	Order No.											
	Standard strokes (mm)											
		5	10	25								
32		39.242.005	39.242.010	39.242.025								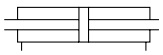
50			39.262.010	39.262.025								
63			39.272.010	39.272.025								

Dimensions

* The stroke is to be limited externally if exceeding the mass shown.

Piston dia. mm	Stroke	A	B	C	D	E	F	G	H Ø	J Ø	K	L Ø	M	N	O	P	X	T	SW	Pressure force (N) at 6 bar	Version	Mass* g
32	5	55	45	33,5	32	32	18	10	10	5,5	M6	12	5,5	G1/8	20		10	14,5	10	406	III	120
32	10	55	45	38,5	32	32	18	10	10	5,5	M6	12	5,5	G1/8	20		15	14,5	10	406	III	120
32	25	55	45	53,5	32	32	18	10	10	5,5	M6	12	5,5	G1/8	20		30	14,5	10	406	III	120
50	10	80	65	36,5	50	47,5		12	11	6,6	M8	16	6,8	G1/4	30		15	15	13	1037	IV	250
50	25	80	65	51,5	50	47,5		12	11	6,6	M8	16	6,8	G1/4	30		30	15	13	1037	IV	250
63	10	90	80	41,5	62	50		12	15	9	M8	16	9	G1/4	30		15	15	13	1715	IV	300
63	25	90	80	56,5	62	50		12	15	9	M8	16	9	G1/4	30		30	15	13	1715	IV	300

Dimensional drawings

Spare seal kits:

32mm bore	Order code: **39.601.04**
50mm bore	Order code: **39.601.05**
63mm bore	Order code: **39.601.06**

III

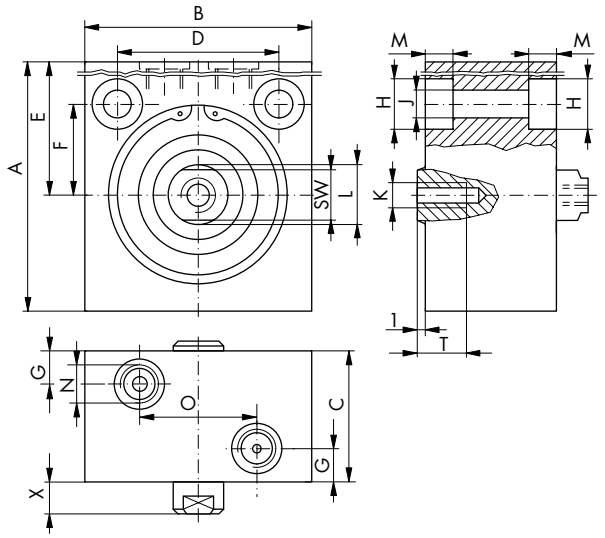

IV

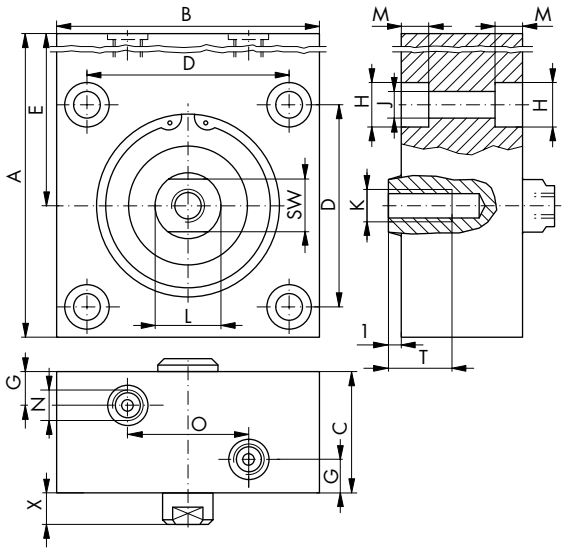

Document No: CL005 Revision 1

Impulse Automation Limited
United Kingdom
Company Registration 665193

Information shown in these data sheets are for guidance purposes only, no liability is accepted for any errors or omissions.
The designer or user is solely responsible for the safe and proper use of these parts, assemblies or equipment described.